FACTORY TUNED ENGINE

O.S. SPEED B21 TY2

INSTRUCTION MANUAL

It is of vital importance, before attempting to operate your engine, to read the general **'SAFETY INSTRUCTIONS AND WARNINGS'** in the following section and to strictly adhere to the advice contained therein.

- Also, please study the entire contents of this instruction manual, so as to familiarize yourself with the controls and other features of the engine.

SAFETY INSTRUCTIONS AND WARNINGS ABOUT YOUR O.S. ENGINE

Remember that your engine is not a " toy ", but a highly efficient internal-combustion machine whose power is capable of harming you, or others, if it is misused or abused. As owner, you, alone, are responsible for the safe operation of your engine, so act with discretion and care at all times. If at some future date, your O.S. engine is acquired by another person, we would respectfully request that these instructions are also passed on to its new owner.

■ The advice which follows is grouped under two headings according to the degree of damage or danger which might arise through misuse or neglect.

⚠WARNINGS

These cover events which might involve serious (in extreme circumstances, even fatal) injury.

⚠ NOTES

These cover the many other possibilities, generally less obvious sources of danger, but which, under certain circumstances, may also cause damage or injury.

⚠WARNINGS

Model engine fuel is poisonous. Do not allow it to come into contact with the eyes or mouth. Always store it in a clearly marked container and out of the reach of children.

Model engine fuel is also highly flammable. Keep it away from open flame, excessive heat, sources of sparks, or anything else which might ignite it. Do not smoke or allow anyone else to smoke, near to it.

Model engines generate considerable heat. Do not touch any part of your engine until it has cooled. Contact with the muffler (silencer), cylinder head or exhaust header pipe, in particular, may result in a serious burn.

Never operate your engine in an enclosed space. Model engines, like automobile engines, exhaust deadly carbon-monoxide. Run your engine only in an open area.

⚠ NOTES

- This engine is intended for model cars. Do not attempt to use it for any other purpose.
- Mount the engine in your model securely, following the manufacturers' recommendations, using appropriate screws and locknuts.
- Install an effective silencer (muffler). Frequent close exposure to a noisy exhaust (especially in the case of the more powerful highspeed engines) may eventually impair your hearing and such noise is also likely to cause annoyance to others over a wide area.
- The wearing of safety glasses is also strongly recommended.
- Take care that the glowplug clip or battery leads do not come into contact with rotating parts. Also check that the linkage to the throttle arm is secure.
- For their safety, keep all onlookers (especially small children) well back (at least 20 feet or 6 meters) when preparing your model for running.
- Before starting the engine, always check the tightness of all the screws and nuts especially those of joint and movable parts such as throttle arm. Missing retightening the loose screws and nuts often causes the parts breakage that is capable of harming you.
- To stop the engine, fully retard the throttle stick and trim lever on the trans-mitter, or, in an emergency, cut off the fuel supply by pinching the fuel delivery line from the tank.
- Warning! Immediately after a glowplug-ignition engine has been run and is still warm, conditions sometimes exist whereby it is just possible for the engine to abruptly restart if it is rotated over compression WITHOUT the glowplug battery being reconnected.

ENGINE CONSTRUCTION

With this engine, the piston will feel tight at the top of its stroke (TDC) when the engine is cold. This is normal. The cylinder bore has a slight taper. The piston and cylinder are designed to achieve a perfect running clearance when they reach operating temperature.

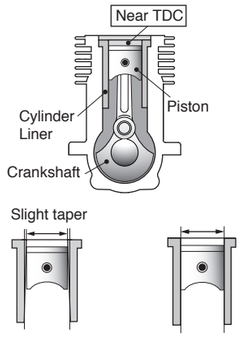

When the engine is cold. When the engine is hot.

NOTES WHEN APPLYING AN ELECTRIC STARTER

Do not over-prime. This could cause a hydraulic lock and damage the engine on application of the electric starter.
If over-primed, remove glowplug, close needle-valve and apply starter to pump out surplus fuel. Cover the head with a rag to prevent any pumped out fuel from getting into your eyes.

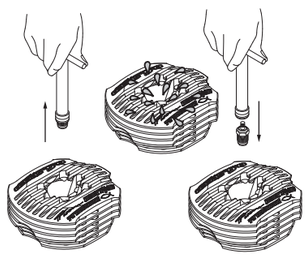

■ NOTES ON OPERATION

ABOUT THE WARRANTY

Since this is a special SPEED version, individual special parts are available only for limited period (one year after finishing the production).
Also, the engine is free of warranty due to damage and/or wear occurred during running.

While Operating

- **Please do not run on a public street, this could cause serious accidents, personal injuries and/or propetry damage.**
- **Please do not run near pedestrians or small children.**
- **Please do not run in small or confined areas.**
- **Please do not run where loud noises can disturb others, such as hospitals and residential areas.**

NOTE
As delivered, the engine has the carburetor lightly fit into its intake. Secure it changing its angle according to the car chassis.

■ ABOUT THE ENGINE

This model is the revival of Ty Tessmann 2016 World champion engine.
The base engine is O.S. SPEED B2101 and 21J3(B) carburetor but with 5.8mm carburetor reducer and its outer head is Ty Tessmann special low profile head. The crankshaft and the crankcase are laser engraved.

Standard accessories

- Glow Plug P3 T-type head (Turbo head) 1piece (Hot Type)
- Exhaust Seal Ring 1piece
- Carburetor Reducer ∅5.8mm (w/ "O" Ring) 1piece
- Dust Cap ∅3,∅16,∅18 1piece each

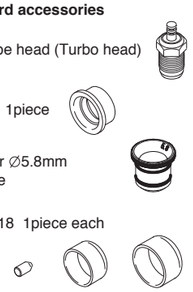

■ TOOLS, ACCESSORIES, etc.

The following items are necessary for operating the engine.

● Items necessary for starting

FUEL
Generally, it is suggested that the user selects a fuel that is commercially available for model two-stroke engines When the brand of fuel is changed, or the nitro content increased, it is advisable to repeat the running-in procedure referred to in the RUNNING-IN paragraphs. Please note that with high-nitro fuels, although power may be increased for competition purposes, glowplug elements do not last as long and engine life will be shortened.

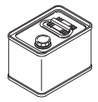

FUEL FILTER
To installed in the fuel line between fuel tank and carburetor to prevent foreign matter from entering the carburetor.

GLOWPLUG IGNITER
Commercialy available handy glowplug heater in which the glowplug battery and battery leads are integrated.

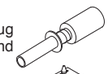

STARTER BOX
For starting the engine.

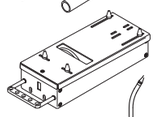

FUEL PUMP
For filling the fuel tank, a simple, polyethylene "squeeze" bottle, with a suitable spout, is required.

O.S. SPEED SILICONE FUEL LINE (optional extra)
The connection between the fuel tank and the engine.
2.5mm ID

■ TOOLS
O.S. SPEED DRIVER TOOLS

O.S. SPEED FLYWHEEL KEY

O.S. SPEED CLUTCH WRENCH & ADJUSTER

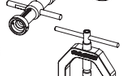

O.S. SPEED FLYWHEEL PULLER

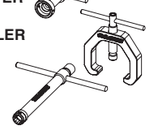

O.S. SPEED PLUG WRENCH

■BASIC ENGINE PARTS

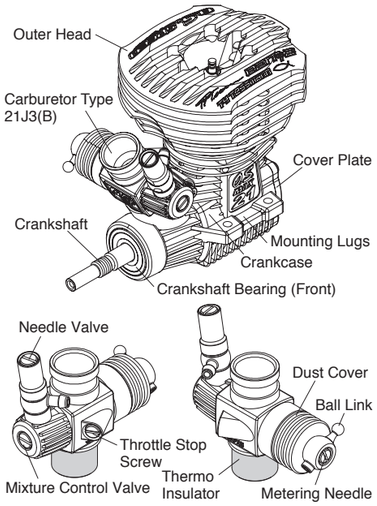

■CARBURETOR CONTROLS • STANDARD POSITIONS (POSITIONS WHEN THE ENGINE LEAVES THE FACTORY)

Four adjustable controls are provided on this carburetor.

● The Needle-Valve:
For adjusting air/fuel ratio (air-fuel mixture) at maximum rpm (fully opened throttle).

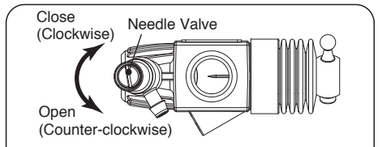

[Standard Position]
3 turns opened from the fully closed position.

[Fully closed position]
Turn the needle-valve clockwise until it stops.
This is the fully closed position.
Do not force it to turn further.

● The Mixture Control Valve:
For adjusting acceleration feeling.
(Adjusting range should be within ±1 turn.)

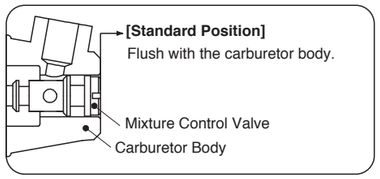

● The Metering Needle:
For adjusting idle and acceleration feeling.

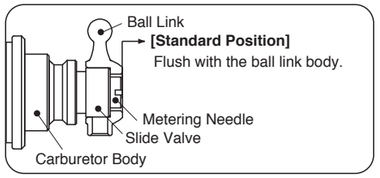

● The Throttle Stop Screw:
For setting the minimum idle speed:

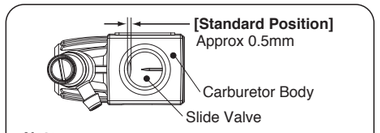

Note:
Sketch shows the carburetor reducer removed.

NOTE: While the Mixture Control Valve and the Metering Valve are set at the standard position when the engine leaves the factory, readjustment may be necessary, occasionally to allow for changes in fuel formula and climatic conditions Readjust the controls only when satisfactory results cannot be obtained with the standard positions following the instructions mentioned in the "CARBURETOR ADJUSTMENT" section.

■ INSTALLATION OF THE CARBURETOR

As delivered, the engine has its carburetor lightly installed in the intake boss. Secure it as follows.

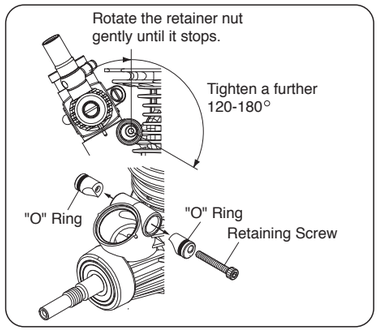

1. Loosen the retainer screw, rotate the carburetor to its correct position and make sure that it is pressed well down into the intake boss, compressing the rubber gasket, before retightening screw.
2. Rotate the retainer screw gently until it stops, then tighten a further 120-180°.Do not overtighten the screw as this will damage the thermo insulator.

Note
Be careful not to damage the O rings when removing the carburetor retainer from the engine. First, remove the retainer Retaining screw, then pull out each part. Do not push the part in or damage the O rings.

● Do not use the carburetor without the carburetor reducer.

■ ENGINE INSTALLATION

Make sure that the vehicle's engine mounting surfaces are level and in the same plane. Poor installation may cause distortion of the crankcase, bearings, etc., resulting in erratic running and loss of performance.
The recommended screws for securing the engine are 3mm or 4-40 steel Allen hexagon socket type. If existing holes in the engine mount do not align perfectly with engine mounting lugs, enlarge them slightly with a needle-file so that screws are in alignment with the mounting holes.

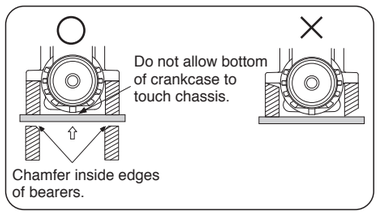

NOTE
The engine bottom may interfere with chassis of some models. In this case, file off the chassis so that the engine may not interfere with the chassis when it is installed.

■ STARTING THE ENGINE & RUNNING-IN ('Breaking-in)

Running- in is a procedure for an engine to come close to actual running conditions (fuel, r.p.m., engine temperature, etc.).

Excessively rich running and prolonged low speed running should be avoided. Prolonged low speed running and low temperature running may result in the oil in the fuel becoming gelled and the piston/liner becoming stuck together.

PRESSURIZED FUEL SYSTEM

- It is recommended that a muffler pressurized fuel feed system be used so that the fuel may be stably fed to the carburetor.

The following procedure is suitable when a fuel containing 30% nitro-methane is used.

1. Set the carburetor controls at the standard positions (positions when the engine leaves the factory.)
2. Switch the transmitter and make sure that each linkage moves correctly.
3. Make sure rotating direction of the starter box is correct (counter-clockwise seen from the front edge of the crankshaft), and turn the engine with the starter box to draw fuel into the engine.
4. Connect glowplug battery lead to heat the plug and start the engine with the starter box.
   When the engine does not start or stops right after being started, try the followings.
   - Close the needle-valve approx. 90° from the standard position.
   - Set the throttle opening a little wider (approx. 1mm) than the standard setting by adjusting the Throttle Stop Screw.

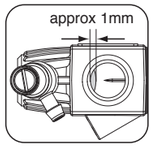

5. When the engine starts, warm it up by repeatedly increasing the rpm to medium speed and back again to a fast idle with the mixture set very rich, glowplug connected, and the driving wheels clear of the ground. The rich mixture will provide adequate lubrication and cooling, indicated by profuse exhaust smoke.

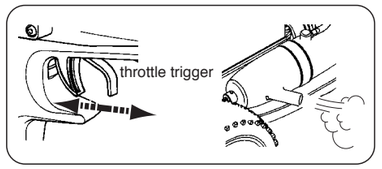

Attention:
It is vitally important to set the throttle at the correct position before starting the engine. If the engine is allowed to run with the throttle too far open under "no load" conditions (i.e. with the driving wheels not in contact with the ground) it will rapidly over-heat and may be seriously damaged.

6. When the engine is warmed up, disconnect the glowplug battery and try running the car on the track. If the engine stops soon after running at around mid speed, the mixture is too rich. Close the needle-valve 15~30°.
   If the engine still stalls, close the metering needle 15~30°. Run the car on the track until one tank of fuel has been consumed, then close the needle-valve very little (within 10°).
7. Repeat this procedure (close needle-valve very little after one tank of fuel has been consumed) until approx. 2 liters of fuel have been consumed, extending gradually the full throttle running time at the straight.
   Carefully observe the exhaust smoke.
   Be sure to run the engine with visible white smoke at all times. If the smoke is not visible, the needle-valve is closed too far.

Now the RUNNING-IN (Breaking-in) is completed.

Note:
In the event of any major working parts (e.g. piston/cylinder liner assembly) being replaced or the fuel being changed, especially to high nitro fuel, the complete running-in should be repeated.

■ How to stop the engine

To stop the engine, close the throttle to idle speed and shut it off completely with the trim lever on the transmitter then cut off the fuel supply by pinching the fuel delivery tube to the carburetor.

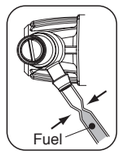

Warning!
Do not touch rotating parts, engine and silencer when stopping the engine as they become very hot, and contact with them may result in a serious burn.

■ CARBURETOR ADJUSTMENT

Carburetor adjustment should be carried out only after the running-in has been completed.

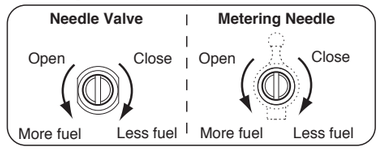

1. NEEDLE VALVE ADJUSTMENT

Run the vehicle (with throttle fully open) over the longest available straight course a few times to observe the model's speed. Return the vehicle to the starting point and close the Needle-valve 15°and repeat the run, taking note of the improvement in performance.
Continue with further runs, gradually reduce the Needle-valve setting aiming to achieve the highest straight-line speed (optimum position).
Remember, however, if the Needle-valve is closed too far, the engine will overheat, accompanied by visibly diminished exhaust smoke and the model will lose speed. At this point, throttle down immediately, stop the vehicle and reopen the Needle-valve 30~45°.

2. METERING NEEDLE ADJUSTMENT

After setting the Needle-valve at optimum position, run the vehicle a few times at the straight line.
With the engine running, close the throttle and allow it idle for about five seconds, then reopen the throttle fully.
If, at this point, the engine puffs out an excessive amount of smoke and the vehicle does not accelerate smoothly and rapidly or even stops, it is probable that the idle mixture is too rich. In this case, turn the Metering needle clockwise 15~30°.
If, on the other hand, the engine tends to speed up momentarily and then cut out abruptly when the throttle is opened, the idle mixture is too lean. In this case, turn the Metering needle counter-clockwise 15~30°.

3. THROTTLE STOP SCREW ADJUSTMENT

If the engine runs too fast with the throttle closed, the throttle stop screw should be turned counter-clockwise to allow the throttle opening to be reduced.

■ OPTIMUM MIXTURE CONTROL POSITION

With the optimum mixture control position, light smoke is visible during high speed running and the engine rpm increase smoothly during acceleration. Carry out adjustment 1.~3. patiently until the engine responds quickly and positively to the throttle control.
Remember that, if the engine is operated with the fuel/air mixture slightly too lean, it will overheat and run unevenly. As with all engines, it is advisable to set both the needle-valve and metering needle slightly on the rich side of the best rpm setting, as a safety measure.
Finally, beyond the normal break-in period, a slight readjustment toward a leaner needle setting may be required to maintain maximum performance.

Note:
Please regard the standard positions in the instruction manual as just a guide. Positions will vary due to the fuel and silencer used. In general, if a fuel containing less nitromenthane is used, the needlevalve will need to be closed further. Remember, closing the needlevalve too far can cause rusting and damage to the engine.

■ CARE AND MAINTENANCE

1. The minute particles of foreign matter, that are present in any fuel may, by accumulating and partially obstructing fuel flow, cause engine performance to become erratic and unreliable. O.S. 'Super-Filters' (large and small) are available, as optional extras, to deal with this problem. One of these filters installed to the pickup tube inside your refueling container, will prevent the entry of foreign material into the fuel tank. It is also recommended that a good in-line filter be installed between the tank and carburetor.

2. Do not forget to clean the filters regularly to remove dirt and lint that accumulate on the filter screens. Also, clean the carburetor itself occasionally.

3. At the end of each operating session, drain out any fuel that may remain in the fuel tank. Afterwards,energize the glow-plug and try to restart the engine, to burn off any fuel that may remain inside the engine. Repeat this procedure until the engine fails to fire. Do this while the engine is still warm.

4. Then, inject some after-run oil into the engine, and rotate the engine with an electric starter for 4 to 5 seconds to distribute the oil to all the working parts.

Note:

Do not inject after-run oil into the carburetor as this may cause the O-rings inside the carburetor to deteriorate. These procedures will reduce the risks of starting difficulties or corrosion after a period of storage.

5. Finally, when cleaning the exterior of the engine, use methanol or a household cleaning agent. Do not use gasoline, kerosene, or any petroleum based chemical which can damage silicone fuel tubing.

Dirt and dust may lodge in ◯ marked places.

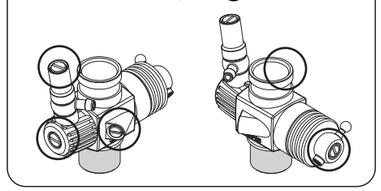

Note:
Crankshaft of this engine is filled with silicone. Do not use light oil nor kerosene, etc. for washing, or the silicone will swell. Use alcohol or fuel for washing and dry it completely.

■ REMOVING DIRT/STAIN

The note on cleaning the outer head

The graphic design on the outer head is not laser engraving but special printing.
When you clean it, do not use paint remover and engine cleaner, otherwise the print may be damaged. Clean it with alcohol after cooling down.

Dirt and stain stuck on the engine and silencer/manifold cause lowering heat dissipation effect. When dirt and stain are detected, remove the engine from the chassis and clean it with alcohol.

■ INATALLING DUST CAPS

When storing the engine, install the cap on the exhaust port, carburetor, etc. to prevent dust from entering the engine.

■ CHECKING THE ENGINE

If the engine will not develop normal performance after long time running due to wearing of parts. It is suggested to replace necessary parts when the following symptoms are detected.

- Engine sound changes and easily overheats.
- Power has dropped extremely.
- Idle is unstable and/or engine tends to stop at idle.

In most cases, ball bearings, cylinder & piston assembly, connecting rod and/or crankcase have become worn. Check the parts carefully and replace them if necessary.

■ O.S. GENUINE PARTS & ACCESSORIES

- **O.S. GLOW PLUG**
  - **P3** (71641300) • **P4** (71641400) • **P5** (71641500)
- **O.S. SPEED T-SERIES GLOW PLUG**
  - **P3** (71642720) • **P4** (71642730)
- **CARBURETOR REDUCER**
  - ∅**6** (71533260) • ∅**6II** (71533261)
  - ∅**6.5** (71533265) • ∅**6.5II** (71533865)
  - ∅**7** (71533270)
- **MB01-80(M2002SC) EXHAUST HEADER PIPE ASSEMBLY** (72106480)
  - **Header Pipe Spring (2pcs.)** (72101272)
  - **Exhaust Seal Ring (2pcs.)** (22826140)
- **MB01-85(M2004SC) EXHAUST HEADER PIPE ASSEMBLY** (72106910)
  - **Header Pipe Spring (2pcs.)** (72101272)
  - **Exhaust Seal Ring (2pcs.)** (22826140)
- **MB01-90(M2005SC) EXHAUST HEADER PIPE ASSEMBLY** (72106920)
  - **Header Pipe Spring (2pcs.)** (72101272)
  - **Exhaust Seal Ring (2pcs.)** (22826140)
- **T-2060SC WN TUNED SILENCER COMPLETE SET** (72106135)
  - **T-2060SC WN Tuned Silencer Assembly** (72106130)
    - **Exhaust Seal Ring (2pcs.)** (22826140)
    - **Joint Spring (3pcs.)** (72106042)
  - **MB01-75(M2000SC) Exhaust Header Pipe Assembly** (72106440)
    - **Header Pipe Spring (2pcs.)** (72101272)
    - **Exhaust Seal Ring (2pcs.)** (22826140)
- **T-2090SC TUNED SILENCER COMPLETE SET** (72106192)
  - **T-2090SC Tuned Silencer Assembly** (72106190)
    - **Exhaust Seal Ring (2pcs.)** (22826140)
    - **Joint Spring (3pcs.)** (72106042)
  - **MB01-75(M2000SC) Exhaust Header Pipe Assembly** (72106440)
    - **Header Pipe Spring (2pcs.)** (72101272)
    - **Exhaust Seal Ring (2pcs.)** (22826140)
- **SUPER AIR CLEANER 203** (72413000)
  - **203 Filter Element (4pcs.)** (72413200)
- **SUPER AIR CLEANER 204** (72415000)
  - **204 Filter Element (4pcs.)** (72415200)
- **PRESSURE CHAMBER SET** (71550000)
- **O.S. SPEED CARBURETOR REPAIR KIT 21** (71490000)
  - **O.S. SPEED Carburetor Repair Parts 21** (71491000)
- **O.S. SPEED CLUTCH BEARING (1050ZZ 4pcs.)** (71550001)
- **O.S. SPEED CLUTCH BEARING (1050ZZ 10pcs.)** (71550002)
- **O.S. SPEED CILICONE TUBE** (72506100) 2.5mm x 1000mm
- **O.S. SPEED EXHAUST SEAL RING 21** (2pcs.) (22826140)
- **DUST CAP SET 3mm** (5pcs.) (73300305)
- **DUST CAP SET 16mm** (3pcs.) (73301612)
- **DUST CAP SET 18mm** (3pcs.) (73301812)
- **O.S. SPEED CLUTCH WRENCH & ADJUSTER** (71415300)
- **O.S. SPEED FLYWHEEL KEY** (71415200)
- **O.S. SPEED FLYWHEEL PULLER** (71415100)
- **O.S. SPEED PLUG WRENCH** (71520100)
- **O.S. SPEED PHILLIPS SCREW DRIVER** No.1 (71417100)
- **O.S. SPEED PHILLIPS SCREW DRIVER** No.2 (71417200)
- **O.S. SPEED SPRING REMOVER** (71415500)
- **O.S. SPEED BODY REAMER** (71415400)
- **O.S. SPEED DRIVER TOOLS**

Code No.	Description
71410150	O.S. SPEED HEX WRENCH DRIVER 1.5
71410200	O.S. SPEED HEX WRENCH DRIVER 2.0
71410250	O.S. SPEED HEX WRENCH DRIVER 2.5
71410300	O.S. SPEED HEX WRENCH DRIVER 3.0
71411200	O.S. SPEED HEX BALL WRENCH DRIVER 2.0
71411250	O.S. SPEED HEX BALL WRENCH DRIVER 2.5
71412300	O.S. SPEED FLAT HEAD SCREWDRIVER 3.0
71413550	O.S. SPEED NUT DRIVER 5.5
71413600	O.S. SPEED NUT DRIVER 6.0
71413700	O.S. SPEED NUT DRIVER 7.0

Code No.	Description
71414015	O.S. SPEED HEX WRENCH TIP ONLY 1.5
71414020	O.S. SPEED HEX WRENCH TIP ONLY 2.0
71414025	O.S. SPEED HEX WRENCH TIP ONLY 2.5
71414030	O.S. SPEED HEX WRENCH TIP ONLY 3.0
71414120	O.S. SPEED HEX BALL WRENCH TIP ONLY 2.0
71414125	O.S. SPEED HEX BALL WRENCH TIP ONLY 2.5
71414230	O.S. SPEED FLAT HEAD SCREWDRIVER TIP 3.0
71414355	O.S. SPEED NUT DRIVER TIP ONLY 5.5
71414360	O.S. SPEED NUT DRIVER TIP ONLY 6.0
71414370	O.S. SPEED NUT DRIVER TIP ONLY 7.0

■ ENGINE EXPLODED VIEW & PARTS LIST

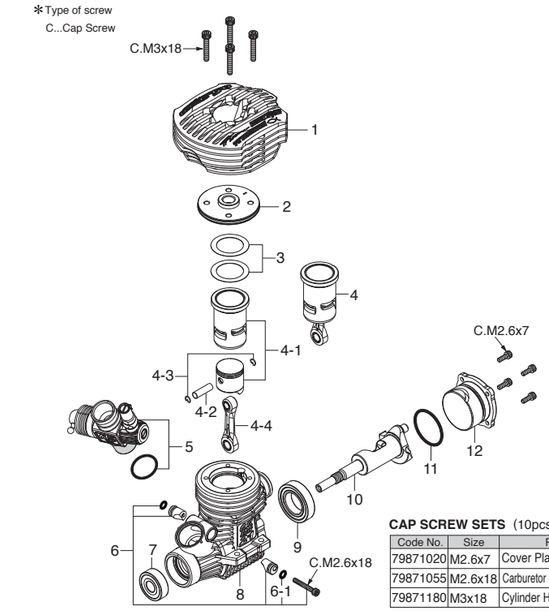

CAP SCREW SETS (10pcs./set)

Code No.	Size	Pcs. used in an engine
79871020	M2.6x7	Cover Plate Retaining Screw (4pcs.)
79871055	M2.6x18	Carburetor Retainer Retaining Screw (1pc.)
79871180	M3x18	Cylinder Head Retaining Screw (4pcs.)

No.	Code No.	Description
1	2A304000	Outer Head
2	2A304100	Inner Head
3	2A204160	Head Gasket Set (0.1mm,0.15mm)
4	2A203010	Built-up Parts Set
4-1	2A203000	Cylinder & Piston Assembly
4-2	22016000	Piston Pin
4-3	21817010	O.S. SPEED Piston Pin Retainer 4mm (6pcs.)
4-4	22425003	Connecting Rod w/piston pin retainers (3pcs.)
5	2AN81002	Carburetor Complete (Type 21J3(B))
6	23981740	Carburetor Retainer Assembly
6-1	24881824	"O" Ring (2pcs.)
7	23731020	Crankshaft Ball Bearing (Front)
8	2A201000	Crankcase
9	23730050	Ceramic Ball Bearing (Rear)
10	2A202000	Crankshaft
11	23107100	Cover Gasket
12	2A207000	Cover Plate
	71641300	Glow Plug P3
	22826145	Exhaust Seal Ring 21 (10pcs.)
	22884254	O.S. SPEED Dust Cap Set For 12-30 Class (3mmx2,16mmx2,18mmx1)

This engine is the limited edition. All the special parts assembled in the engine are not available as spare parts. Use standard parts when you replace them.
The following are special parts for the limited edition.
• Outer head with special engraving • Crankshaft with special engraving • 5.8mm carburetor restrictor • Crankcase with special engraving

■ CARBURETOR EXPLODED VIEW & PARTS LIST

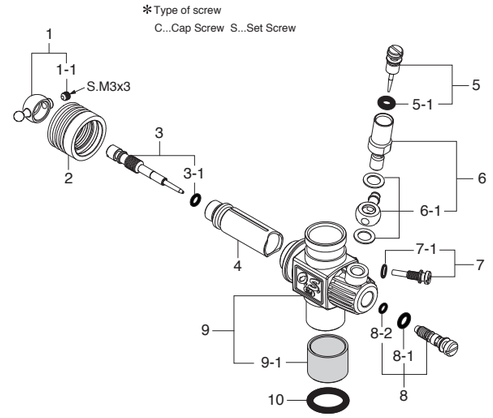

No.	Code No.	Description
1	23781400	Ball Link No.3
1-1	26381501	Retaining Screw
2	23981520	Dust Cover
3	23818340	Metering Needle Assembly
3-1	27881820	"O" Ring (2pcs.)
4	22848210	Slide Valve
5	23618197	Needle Assembly
5-1	46066319	"O" Ring (2pcs.)
6	22082940	Needle Holder Assembly
6-1	22082950	Fuel Inlet (No.15)
7	22848160	Throttle Stop Screw
7-1	27881820	"O" Ring (2pcs.)
8	22082600	Mixture Control Valve Assembly
8-1	46066319	"O" Ring (L) (2pcs.)
8-2	22781800	"O" Ring (S) (2pcs.)
9	2AN81100	Carburetor Body 21J3(B) (w/o Reducer)
9-1	2AN81101	Thermo Insulator
10	29015019	Carburetor Rubber Gasket

■ THREE VIEW DRAWING

Dimensions (mm)

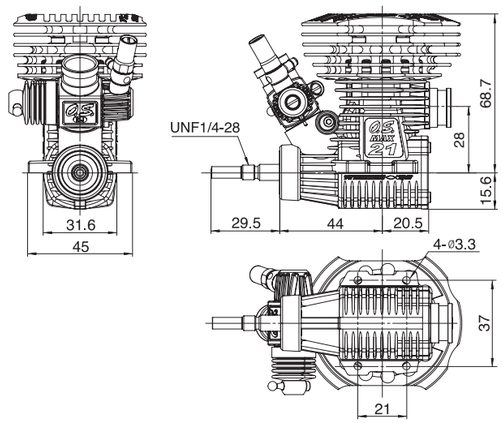

SPECIFICATIONS

■ Displacement	3.46 cc / 0.211 cu.in.
■ Bore	16.4 mm / 0.646 in.
■ Stroke	16.4 mm / 0.646 in.
■ Output	2.65 ps / 2.61 hp / 34,000 r.p.m.
■ Practical R.P.M.	4,000-42,000 r.p.m.
■ Weight	356 g / 12.56 oz. (Engine)

The specifications are subject to alteration for improvement without notice.

O.S. ENGINES MFG.CO.,LTD.
6-15 3-Chome Imagawa Higashisumiyoshi-ku
Osaka 546-0003, Japan TEL. (06)6702-0225
http://www.os-engines.co.jp FAX. (06)6704-2722

© Copyright 2017 by O.S. Engines Mfg. Co., Ltd. All rights reserved. Printed in Japan.

60093360 061902