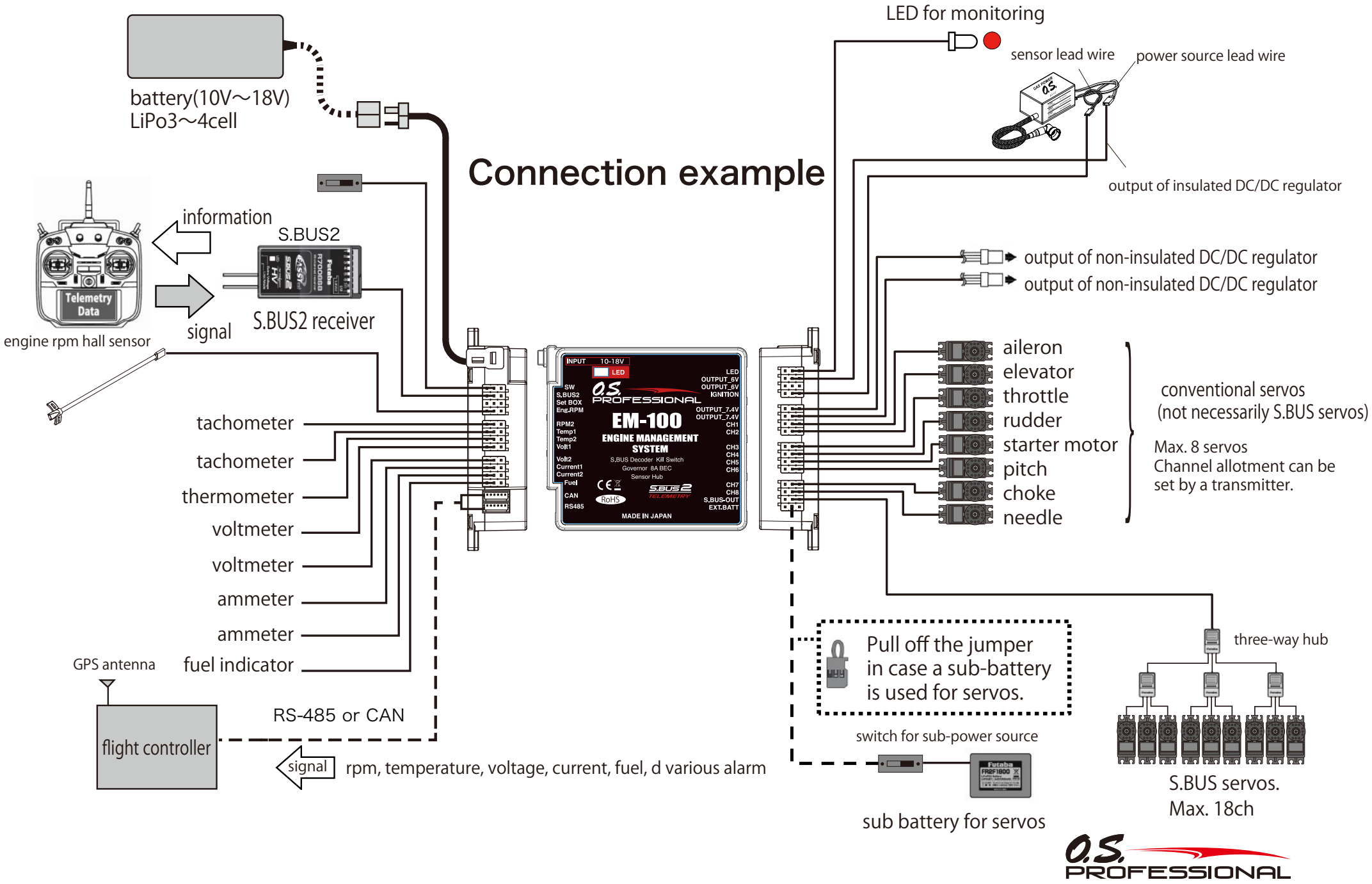Connection example